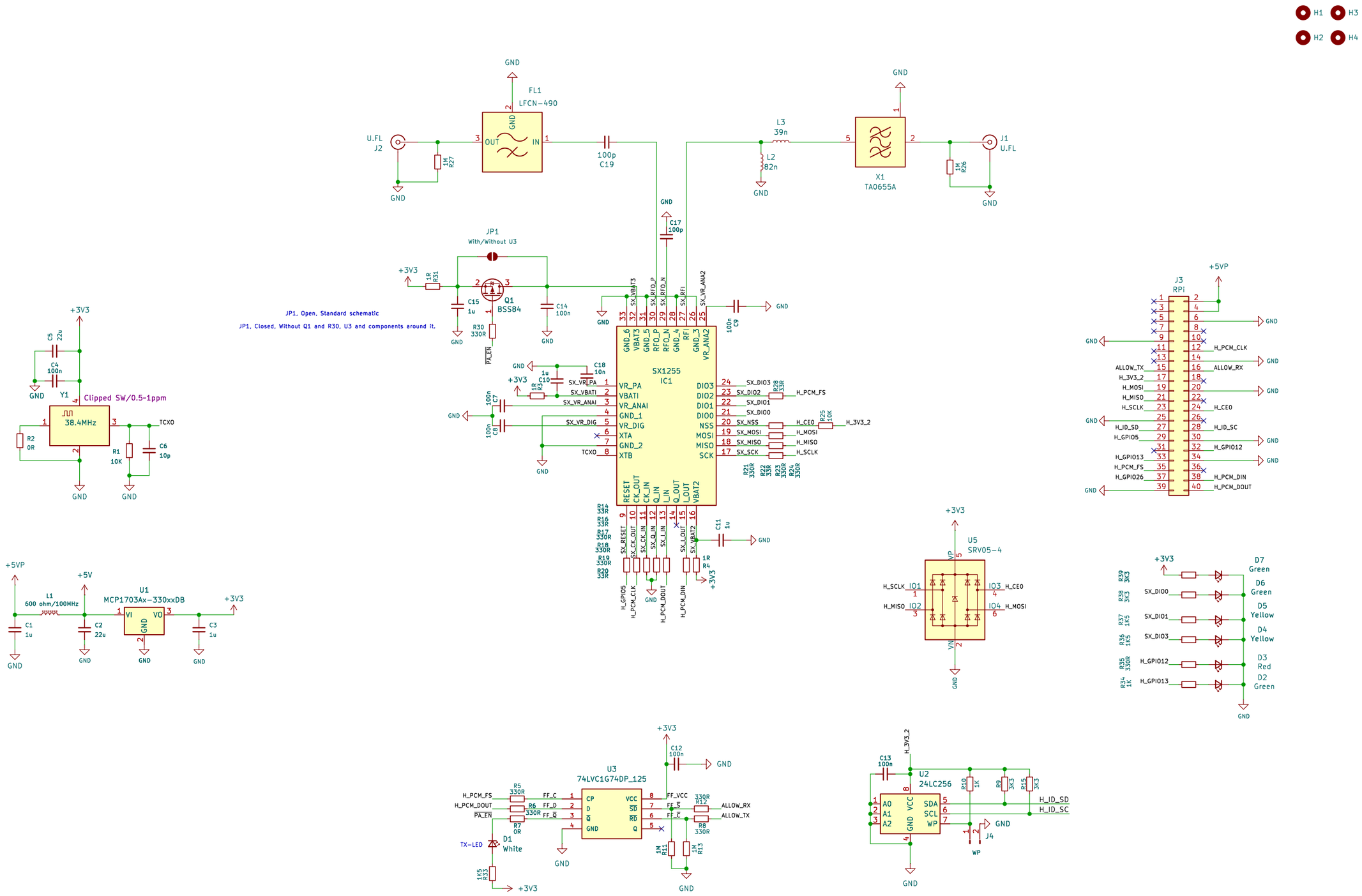

Modified SXceiver

Z32IT

Sheet: /

File: HAT without PA.kicad_sch

Title: HAT with LPF & BPF filters and SPI line protection

Size: A3	Date: 2026-03-30	**Rev: V1.2**
KiCad E.D.A. 9.0.7		Id: 1/1